SensAlarm® PLUS

Modbus Communications Board

(RS-485)

User Manual

Document No. 360-0129-01
(Revision E)

Sensidyne, LP.
1000 112th Circle N, Suite 100
St. Petersburg, Florida 33716 USA
800-451-9444 • +1 727-530-3602 • +1 727-539-0550 [fax]
web: www.sensidyne.com • **e-mail:** info@sensidyne.com

• Field Installation Kit

If you have ordered the field install kit p/n 821-0303-02, you will need to install the MODBUS Card into your SensAlarm Plus Monitor as follows (If not skip to **Set Up**):

1. Disconnect Power - Open cover.
2. Remove screws from Main PCA.
3. Install (3) Hex Stand-offs on Main PCA.

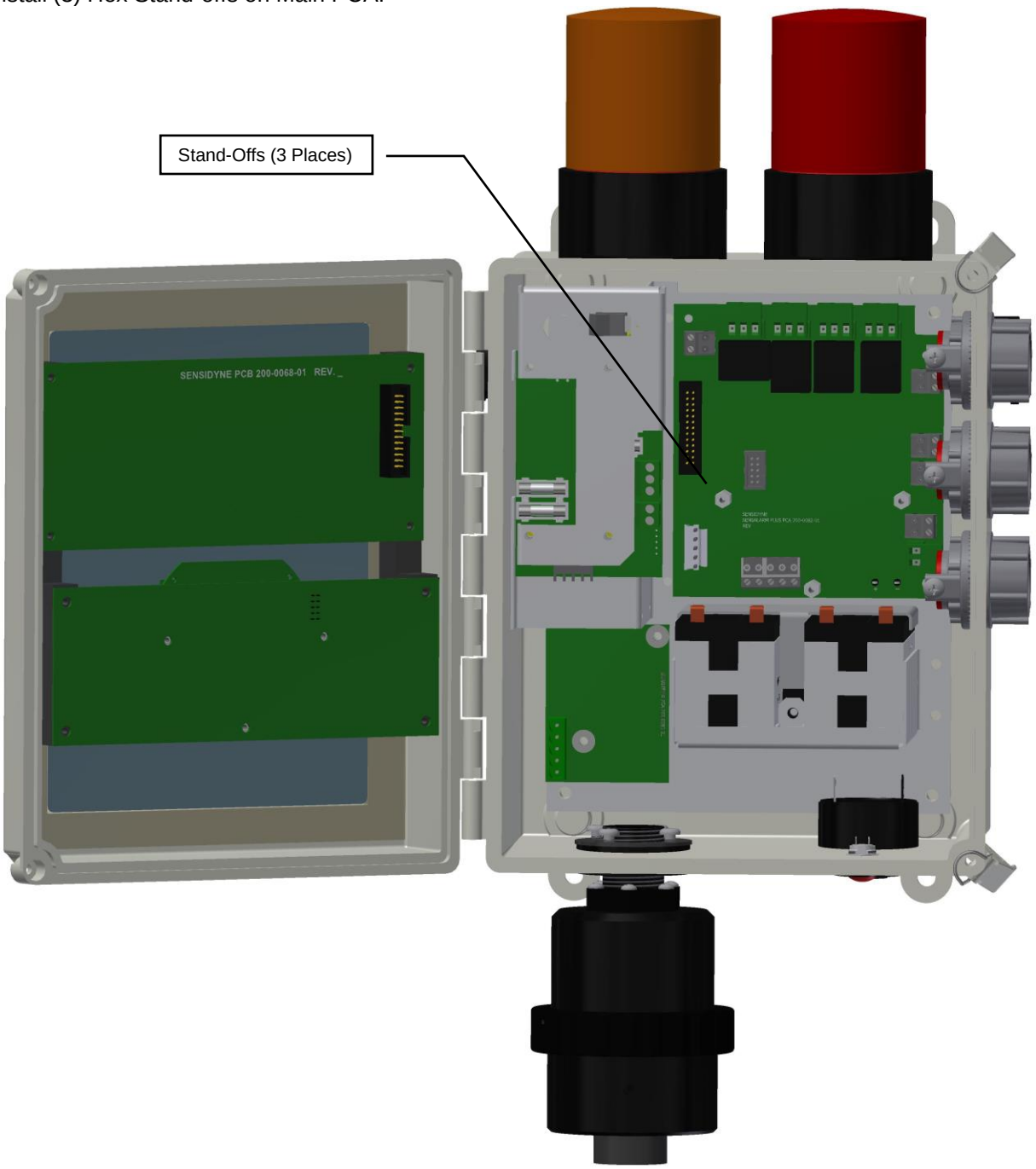

4. Remove Plug from TB8 on the MODBUS PCA. Wire Plug and Replace.

5. Place the MODBUS Card on the Hex Stand-offs and gently couple the Electrical Plug into the jack on the Main Printed Circuit Board Assembly.

6. Re-install the (3) Screws and Lock-Washers into the Hex Stand-offs.

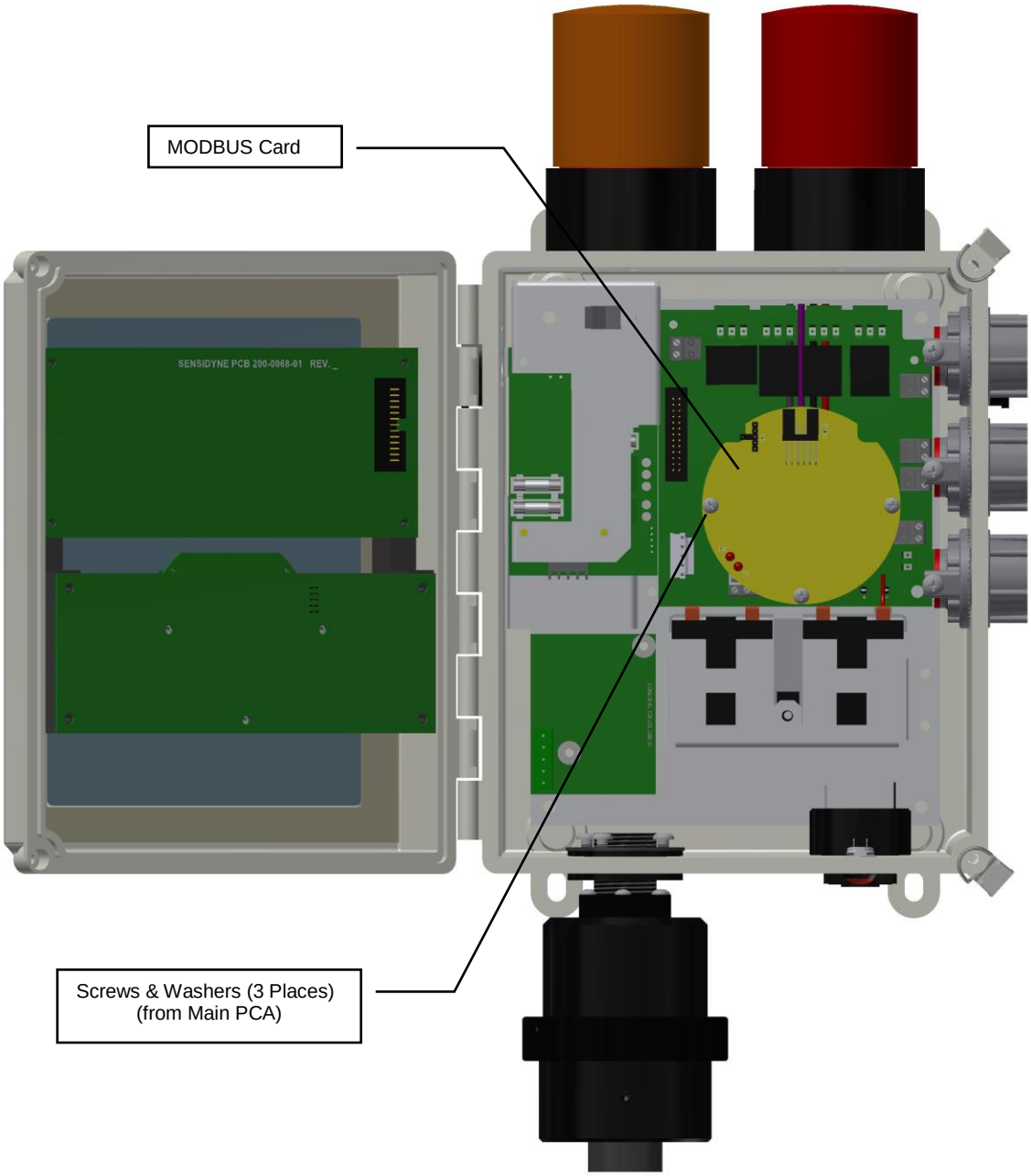

7. Proceed with "**SET UP**".

Set Up

NOTE

The Modbus Communications Board is shipped from the factory with jumpers at JP1 and HDR1 installed as shown is figure. Make certain you adjust jumpers for the network being used.

The Board is shipped with wires connected to each of the terminal points. These leads are used in the final test of the Board before being shipped from the factory. For your convenience in testing the Board upon delivery, the color code of the wires is given. These wires need to be replaced before the unit is put into service. (See Cable Recommendation section)

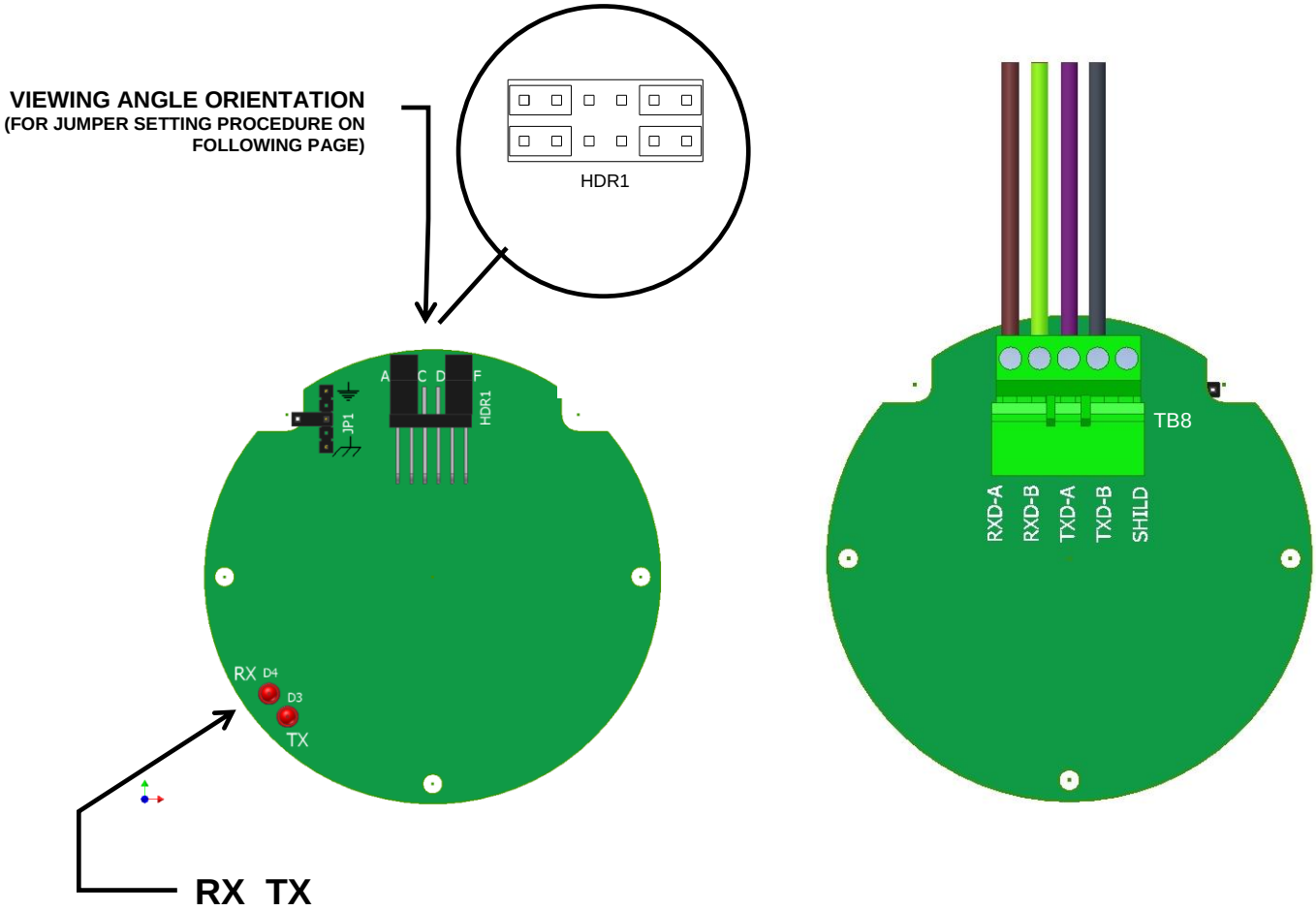

4 wire connections and termination resistors

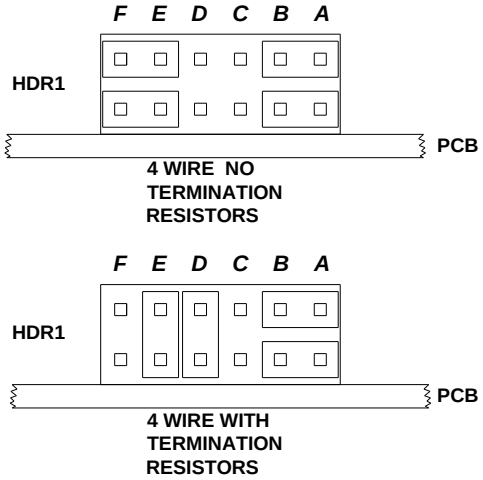

(SEE VIEWING ANGLE ORIENTATION ON PREVIOUS PAGE)		
SensAlert Plus	**Test Lead Color**	**Modbus Master**
TB8-5 RXD-A	**Brown**	**TXD-B**
TB8-4 RXD-B	**Green**	**TXD-A**
TB8-3 TXD-A	**Violet**	**RXD-B**
TB8-2 TXD-B	**Gray**	**RXD-A**
TB8-1 SHLD	**NOT USED**	**Shield**

2 wire connections and termination resistors

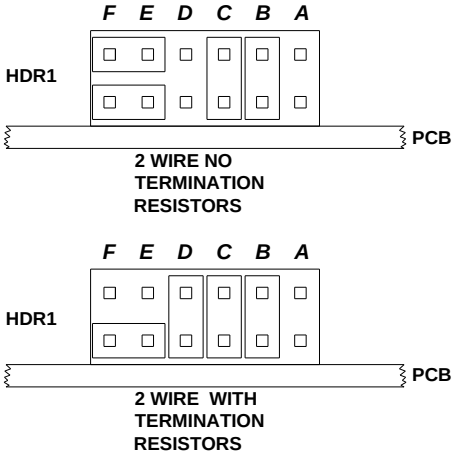

(SEE VIEWING ANGLE ORIENTATION ON PREVIOUS PAGE)		
SensAlert Plus	**Test Lead Color**	**Modbus Master**
TB8-5 RXD-A	**Brown**	**B**
TB8-4 RXD-B	**Green**	**A**
TB8-3 TXD-A	**NOT USED**	**NOT USED**
TB8-2 TXD-B	**NOT USED**	**NOT USED**
TB8-1 SHLD	**NOT USED**	**Shield**

Shield Terminations

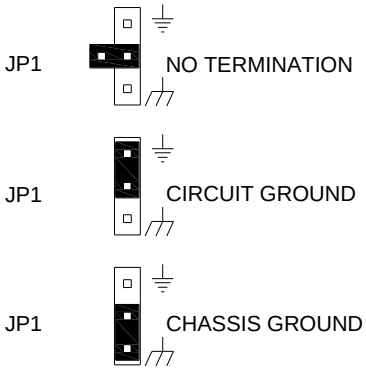

• Refer to SensAlarm Plus User Manual (P/N: 360-0126-01)

The following section is reprinted from the SensAlarm Plus User Manual. A properly installed Modbus Communication Board will indicate Modbus Comm at step 5.2.5.5. If "Hart Comm." Or "No Comm Installed" appears, an improper Board has been installed in the monitor.

5.2 Main Menu

As shown on the example display to the right, the top level (main) menu allows the selection of several submenus, documented below. Selecting **OK** brings up the submenus.

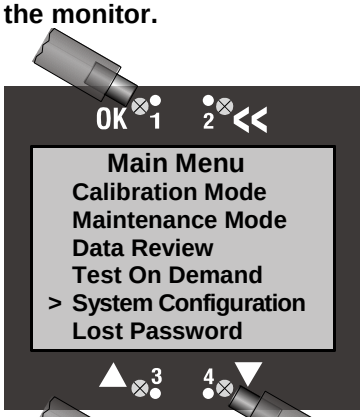

5.2.5 System Configuration

The System Configuration menu provides a large number of functions for configuring the operation of the unit. These include conducting a self test, alarm and relay setup, adjusting the 4 mA & 20 mA outputs, setting the date and time, communications setup, adjusting TOD cell functions, setting combustible sensor parameters, and setting a password.

5.2.5.5 Communication Setup

This menu provides adjustment for both standard and optional installed communications methods. Options installed will be displayed. Possible options are

Hart Comm
Modbus Comm

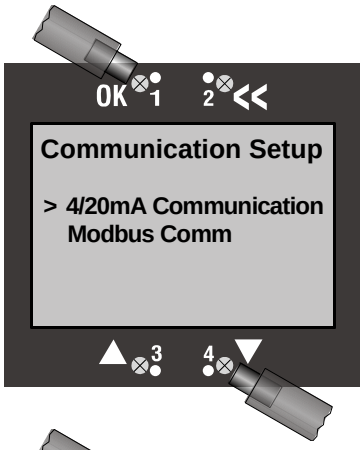

(If no Communications Option is installed Display will read)

No Comm Installed

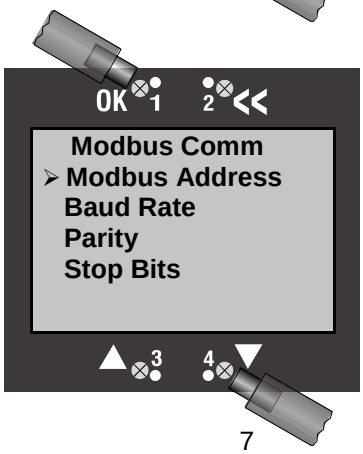

5.2.3 Data Review

Data review allows the examination of data stored by the unit. Data reviews are available for the Test-On-Demand gas generating cell, the installed sensor, Fault Currents, Active Alarms/Faults, Rly Alm Fault Config., Calibration Info, and Communication Review.

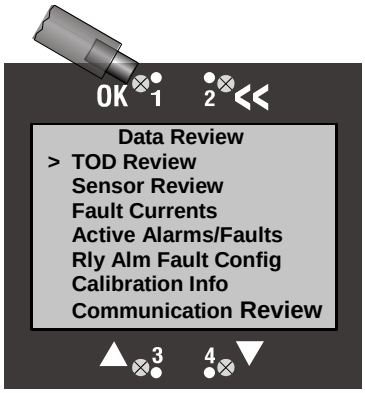

5.2.3.7 Communication Review

The Communication Review screen displays the present setting Of the 4/20mA Current Loop (SensAlert sensor ID or None). Depending on which Communications Option is installed (None, HART, or Modbus) the display will vary.

5.1 Menu Map

5.5. Communication Setup

5.5.1. **4-20ma Communications**

5.5.1.1. None

5.5.1.2. SensAlert Sensor ID

5.5.2. **Hart Comm or Modbus or No Comm Installed**

5.5.2.1. Hart Comm

5.5.2.1.1. – No User Adjustments Through this Interface Use Current Loop

5.5.2.2. Modbus Comm

5.5.2.2.1. Modbus Address

5.5.2.2.2. Baud Rate

5.5.2.2.3. Parity

5.5.2.2.4. Stop bits

5.5.2.3. No Comm Installed

5.5.2.3.1. -No Communications Board Installed

• Modbus Specifications

RTU Transmission Mode
Byte-order: most-significant-first

Functions	01 (0x01) Read Coils
	02 (0x02) Read Discrete Inputs
	03 (0x03) Read Holding Registers
	04 (0x04) Read Input Registers
	05 (0x05) Write Single Coil
	06 (0x06) Write Single Register
	16 (0x10) Write Multiple Registers

• Modbus RS485 Electrical Specifications

RS485	2 wire or 4 wire
Termination Resisitors	120 Ωohms
RS485 Load	2 wire – ½ Load
	4 wire – ¼ Load

• Comm Port Specifications

Baud Rate	9600, 19200, 38400
Parity	None, Even, Odd
Start Bit	1
Data Bits	8
Stop Bit	1 for Parity, 1 or 2 for No Parity

• Indicators

RX LED	Indicates received communications
TX LED	Indicates transmitted communications

• Cable Recommendations

20-24 AWG Twisted Pair, Overall Shielded
2 wire – Single Pair
4 wire – Two Pair
Belden 9501, 9502, 8451, 8761, 1419A
Alpha Wire 5471C, 5472C

• Modbus Register Addresses

This section provides information about the implementation of the Modbus Protocol on the Sensidyne SensAlarm Plus Monitor.

The following Modbus Register Addresses have been implemented in the SensAlarm Plus device.

Coils

00001	Start Zeroing Sensor
00004	Start Sensor Calibration
00007	Start Automatic TOD Test
00010	Stop Sensor Calibration
00017	Clear Latched Relays
00021	Enable Alarm 1
00022	Enable Alarm 2
00023	Enable Alarm 3
00024	Enable Alarm 4
00025	Relay 1 Latch Enable
00026	Relay 2 Latch Enable
00027	Relay 3 Latch Enable
00028	Relay 4 Latch Enable
00032	TOD Fail Enable
00041	Head Fail Fault Enable
00042	Sensor Missing Fault Enable
00043	Sensor Fail Fault Enable
00044	Sensor End of Life Fault Enable
00045	TOD End of Life Enable
00046	Loop Current Out of Tolerance Fault Enable
00047	Calibration Mode Fault Enable
00048	Maintenance Mode Fault Enable

Discrete Inputs

10001	Zeroing Sensor Started
10002	Zeroing Sensor Good
10003	Zeroing Sensor Failed
10004	Calibration of Sensor Started
10005	Calibration of Sensor Good
10006	Calibration of Sensor Failed
10007	TOD Test Started
10008	TOD Test Good
10009	TOD Test Failed
10017	Alarm 1 Active
10018	Alarm 2 Active
10019	Alarm 3 Active
10020	Alarm 4 Active
10031	TOD Test Fail Active
10033	Missing Sensor Active
10034	Head Fail Active
10035	Sensor Fail Active
10036	Sensor End of Life Active
10037	TOD End of Life Active
10038	Loop Current Out of Tolerance
10039	Calibration Mode Fault Active
10040	Maintenance Mode Fault Active

• Modbus Register Addresses

Input Registers

30031	Float	Gas Concentration
30033	Float	Full Scale Value
30035	Float	Loop Current
30037	Float	TWA Gas Concentration
30039	Float	Sensor Temperature Degrees C
30041	Float	Max Gas Concentration
30043	Float	Date/Time of Max Gas Concentration
30095	Long	Date/Time of Last Calibration
30097	Float	Last Calibration Gas Concentration
30099	Float	Minimum Sensor Temperature
30101	Long	Date/Time of Minimum Sensor Temperature
30103	Float	Maximum Sensor Temperature
30105	Long	Date/Time of Maximum Sensor Temperature
30111	Float	Calibration Pre Exposure Gas Concentration
30159	Int	8 bits Sensor Type High 8 bits Sensor Type Low
30160	Int	Display Units
30161	Int	8 bits Display Version High 8 bits Display Version Low
30162	Int	8 bits Comm Board High 8 bits Comm Board Low
30163	Int	8 bits Head Version High 8 bits Head Version Low
30164	Int	8bits Sensor Version High 8 bits Sensor Version Low
30175	Float	Minimum Span Value
30177	Float	Maximum Span Value
30179	Float	Peak TOD Test Value
30181	Long	Date/Time of Last TOD Test
30183	Int	12 Bit Representation of Current Loop, 4mA is a count of 800, 20mA is a count of 4000

Date/Time values are seconds from 12:00:00 AM March 1, 2000

Holding Registers

40031	Float	Gas Concentration
40033	Float	Full Scale Value
40035	Float	Loop Current
40037	Float	TWA Gas Concentration
40127	Float	Alarm 1 Setpoint
40129	Float	Alarm 2 Setpoint
40131	Float	Alarm 3 Setpoint
40133	Float	Alarm 4 Setpoint
40183	Int	12 Bit Representation of Current Loop, 4mA is a count of 800, 20mA is a count of 4000

For further information about the Modbus protocol contact the Modbus-IDA at www.modbus.org

Modbus-IDA Headquarters:
37 Wheeler Rd
North Grafton, MA 01536

Mailing Address:
PO Box 628
Hopkinton, MA 01748
Telephone: +1 508-435-7170
Fax: +1 508-435-6929
e-mail: info@modbus-ida.org

Sensidyne, LP.
1000 112th Circle N, Suite 100
St. Petersburg, Florida 33716 USA
800-451-9444 • +1 727-530-3602 • +1 727-539-0550 [fax]
web: www.sensidyne.com • e-mail: info@sensidyne.com